LM2853

LM2853 3A 550 kHz Synchronous SIMPLE SWITCHER® Buck Regulator

Literature Number: SNVS459

National Semiconductor

October 2006

LM2853
3A 550 kHz Synchronous SIMPLE SWITCHER® Buck Regulator

General Description

The LM2853 synchronous SIMPLE SWITCHER® buck regulator is a 550 kHz step-down switching voltage regulator capable of driving up to a 3A load with excellent line and load regulation. The LM2853 accepts an input voltage between 3.0V and 5.5V and delivers a customizable output voltage that is factory programmable from 0.8V to 3.3V in 100mV increments. Internal type-three compensation enables a low component count solution and greatly simplifies external component selection. The exposed-pad TSSOP-14 package enhances the thermal performance of the LM2853.

Features

- Input voltage range of 3.0V to 5.5V
- Factory EEPROM set output voltages from 0.8V to 3.3V in 100 mV increments
- Maximum load current of 3A
- Voltage Mode Control
- Internal type-three compensation
- Switching frequency of 550 kHz
- Low standby current of 12 µA
- Internal 40 mΩ MOSFET switches
- Standard voltage options 0.8/1.0/1.2/1.5/1.8/2.5/3.0/3.3 volts
- Exposed pad TSSOP-14 package

Applications

- Low voltage point of load regulation
- Local solution for FPGA/DSP/ASIC core power
- Broadband networking and communications infrastructure

Typical Application Circuit

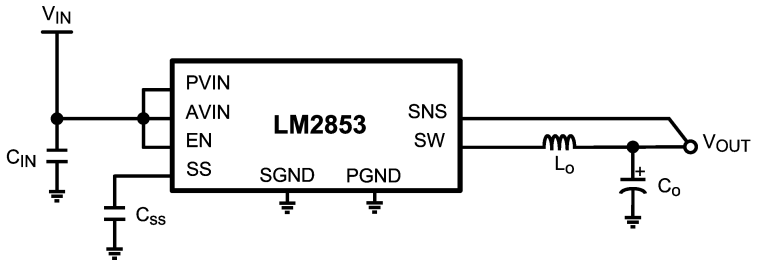

20201502

Efficiency vs Load Current (V_{OUT} = 3.3V)

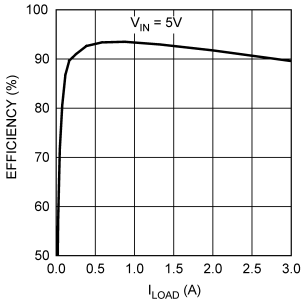

20201501

SIMPLE SWITCHER® is a Registered Trademark of National Semiconductor Corporation.

© 2006 National Semiconductor Corporation

Connection Diagram

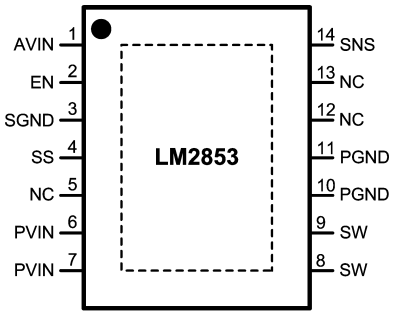

Top View
MXA14A

20201503

Ordering Information

Order Number	Voltage Option	Package Marking	Package Type	Package Drawing	Supplied As
LM2853MH-0.8	0.8	LM2853-0.8	TSSOP-14 exposed pad	MXA14A	94 Units, Rail
LM2853MHX-0.8					2500 Units, Tape and Reel
LM2853MH-1.0	1.0	LM2853-1.0			94 Units, Rail
LM2853MHX-1.0					2500 Units, Tape and Reel
LM2853MH-1.2	1.2	LM2853-1.2			94 Units, Rail
LM2853MHX-1.2					2500 Units, Tape and Reel
LM2853MH-1.5	1.5	LM2853-1.5			94 Units, Rail
LM2853MHX-1.5					2500 Units, Tape and Reel
LM2853MH-1.8	1.8	LM2853-1.8			94 Units, Rail
LM2853MHX-1.8					2500 Units, Tape and Reel
LM2853MH-2.5	2.5	LM2853-2.5			94 Units, Rail
LM2853MHX-2.5					2500 Units, Tape and Reel
LM2853MH-3.0	3.0	LM2853-3.0			94 Units, Rail
LM2853MHX-3.0					2500 Units, Tape and Reel
LM2853MH-3.3	3.3	LM2853-3.3			94 Units, Rail
LM2853MHX-3.3					2500 Units, Tape and Reel

Note: Contact factory for other voltage options.

Pin Descriptions

Pin #	Name	Function
1	AVIN	Input Voltage for Control Circuitry.
2	EN	Enable.
3	SGND	Low noise ground.
4	SS	Soft-Start Pin.
5	NC	No Connect. This pin must be tied to ground.
6,7	PVIN	Input Voltage for Power Circuitry.
8,9	SW	Switch Pin.
10,11	PGND	Power Ground.
12,13	NC	No-Connect. These pins must be tied to ground.
14	SNS	Output Voltage Sense Pin.
Exposed Pad	EP	The exposed pad is internally connected to GND, but it cannot be used as the primary GND connection. The exposed pad should be soldered to an external GND plane.

Absolute Maximum Ratings (Note 1)

If Military/Aerospace specified devices are required, please contact the National Semiconductor Sales Office/ Distributors for availability and specifications.

AVIN, PVIN, EN, SNS, SW, SS	−0.3V to 6.0V
ESD Susceptibility (Note 2)	2kV
Power Dissipation	Internally Limited
Storage Temperature Range	−65˚C to +150˚C
Maximum Junction Temp.	150˚C
14-Pin Exposed Pad TSSOP Package	
Infrared (15 sec)	220˚C
Vapor Phase (60 sec)	215˚C
Soldering (10 sec)	260˚C

Operating Ratings (Note 1)

PVIN to GND	1.5V to 5.5V
AVIN to GND	3.0V to 5.5V
Junction Temperature	−40˚C to +125˚C

Electrical Characteristics

Specifications with standard typeface are for T_J = 25˚C, and those in bold face type apply over the full Junction Temperature Range (−40˚C to 125˚C). Minimum and Maximum limits are guaranteed through test, design or statistical correlation. Typical values represent the most likely parametric norm at T_J = 25˚C and are provided for reference purposes only. Unless otherwise specified AVIN = PVIN = 5V.

Symbol	Parameter	Conditions	Min	Typ	Max	Units
SYSTEM PARAMETERS						
V_{OUT}	Voltage Tolerance (Note 3)	V_{OUT} = 0.8V option	**0.782**	0.8	**0.818**	V
		V_{OUT} = 1.0V option	**0.9775**	1.0	**1.0225**	
		V_{OUT} = 1.2V option	**1.1730**	1.2	**1.227**	
		V_{OUT} = 1.5V option	**1.4663**	1.5	**1.5337**	
		V_{OUT} = 1.8V option	**1.7595**	1.8	**1.8405**	
		V_{OUT} = 2.5V option	**2.4437**	2.5	**2.5563**	
		V_{OUT} = 3.0V option	**2.9325**	3.0	**3.0675**	
		V_{OUT} = 3.3V option	**3.2257**	3.3	**3.3743**	
$\Delta V_{OUT}/\Delta AVIN$	Line Regulation (Note 3)	V_{OUT} = 0.8V, 1.0V, 1.2V, 1.5V, 1.8V or 2.5V 3.0V ≤ AVIN ≤ 5.5V		0.2	**1.1**	%
		V_{OUT} = 3.0V or 3.3V 3.5V ≤ AVIN ≤ 5.5V		0.2	**1.1**	%
$\Delta V_{OUT}/\Delta I_O$	Load Regulation	Normal operation		2		mV/A
V_{ON}	UVLO Threshold (AVIN)	Rising		2.47	**3.0**	V
		Falling Hysteresis	**50**	155	**260**	mV
$R_{DS(ON)-P}$	PFET On Resistance	Isw = 3A		40	**120**	mΩ
$R_{DS(ON)-N}$	NFET On Resistance	Isw = 3A		32	**100**	mΩ
R_{SS}	Soft-Start Resistance			450		kΩ
I_{CL}	Peak Current Limit Threshold		**3.6**	5		A
I_Q	Operating Current	Non-switching		0.85	**2**	mA
I_{SD}	Shutdown Quiescent Current	EN = 0V		12	**50**	µA
R_{SNS}	Sense Pin Resistance			432		kΩ
PWM						
f_{osc}	Switching Frequency	.	**325**	550	**725**	kHz
D_{range}	Duty Cycle Range		**0**		**100**	%
ENABLE CONTROL (Note 4)						
V_{IH}	EN Pin Minimum High Input		**75**			% of AVIN
V_{IL}	EN Pin Maximum Low Input				**25**	% of AVIN
I_{EN}	EN Pin Pullup Current	EN = 0V		1.5		µA

Electrical Characteristics Specifications with standard typeface are for T_J = 25˚C, and those in bold face type apply over the full Junction Temperature Range (–40˚C to 125˚C). Minimum and Maximum limits are guaranteed through test, design or statistical correlation. Typical values represent the most likely parametric norm at T_J = 25˚C and are provided for reference purposes only. Unless otherwise specified AVIN = PVIN = 5V. (Continued)

Symbol	Parameter	Conditions	Min	Typ	Max	Units
THERMAL CONTROLS						
T_{SD}	Thermal Shutdown Threshold			165		˚C
$T_{SD\text{-}HYS}$	Hysteresis for Thermal Shutdown			10		˚C
THERMAL RESISTANCE						
θ_{JA}	Junction to Ambient	MXA14A		38		˚C/W

Note 1: Absolute maximum ratings indicate limits beyond which damage to the device may occur. Operating Range indicates conditions for which the device is intended to be functional, but does not guarantee specific performance limits. For guaranteed specifications and test conditions, see the Electrical Characteristics.

Note 2: The human body model is a 100 pF capacitor discharged through a 1.5 kΩ resistor into each pin. Test Method is per JESD22-AI14.

Note 3: V_{OUT} measured in a non-switching, closed-loop configuration at the SNS pin.

Note 4: The enable pin is internally pulled up, so the LM2853 is automatically enabled unless an external enable voltage is applied.

Typical Performance Characteristics

Unless otherwise specified, the following conditions apply: V_{IN} = AVIN = PVIN = 5V, T_J = 25˚C.

Efficiency vs. I_{LOAD}
V_{OUT} = 1.8V

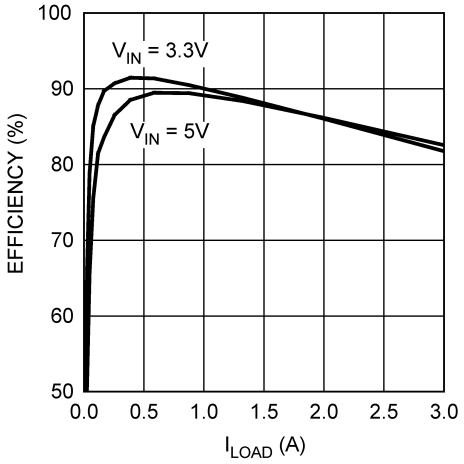

20201507

NFET $R_{DS(ON)}$ vs. Temperature

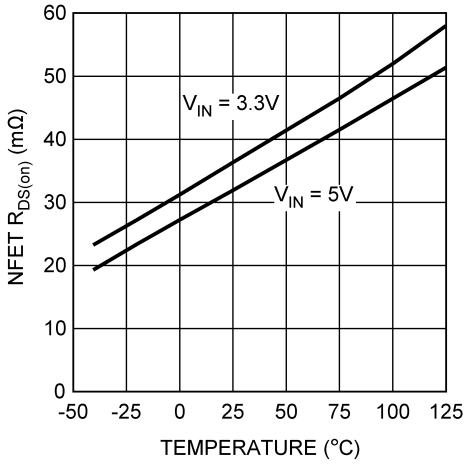

20201505

Efficiency vs. I_{LOAD}
V_{OUT} = 2.5V

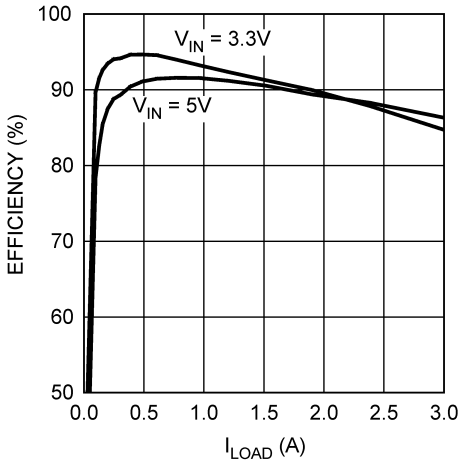

20201509

PFET $R_{DS(ON)}$ vs. Temperature

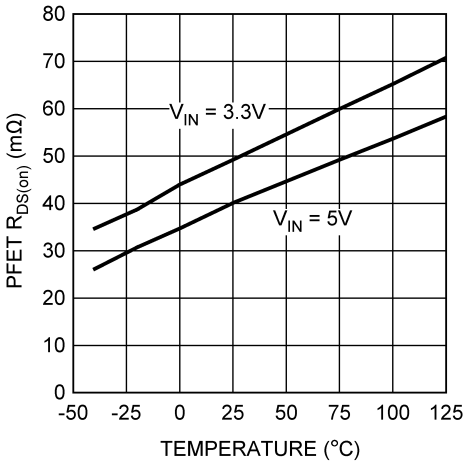

20201504

Efficiency vs. I_{LOAD}
V_{OUT} = 3.3V

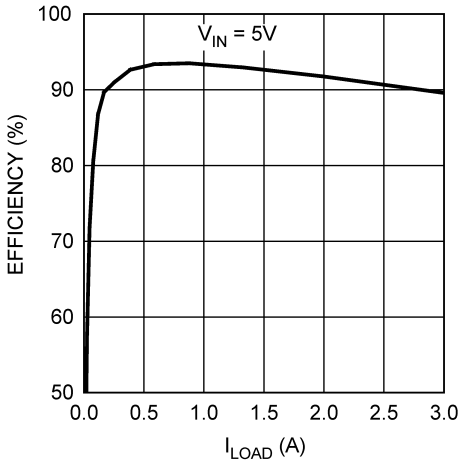

20201508

Switching Frequency vs. Temperature

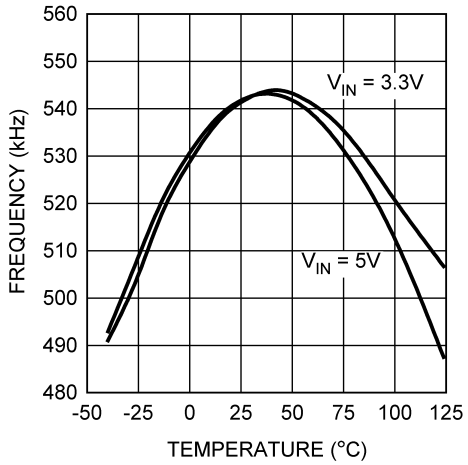

20201506

Typical Performance Characteristics

Unless otherwise specified, the following conditions apply: V_{IN} = AVIN = PVIN = 5V, T_J = 25˚C. (Continued)

I_Q vs. V_{IN} and Temperature

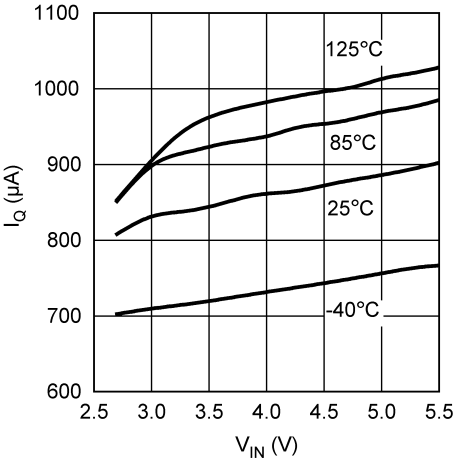

20201510

I_{SD} vs. V_{IN} and Temperature

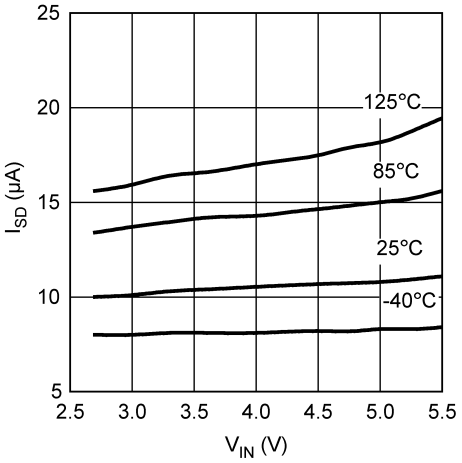

20201511

Block Diagram

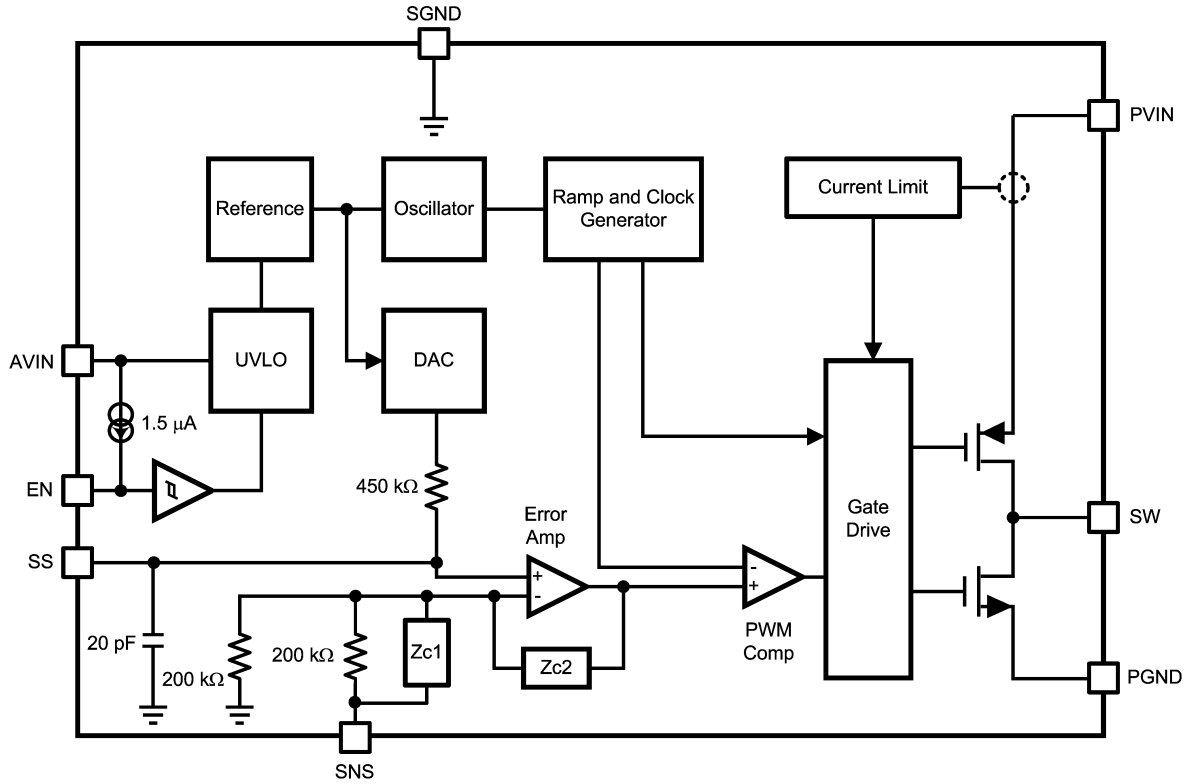

20201512

Applications Information

The LM2853 is a DC-DC buck regulator belonging to National Semiconductor's synchronous SIMPLE SWITCHER® family. Integration of the PWM controller, power switches and compensation network greatly reduces the component count required to implement a switching power supply. A typical application requires only four components: an input capacitor, a soft-start capacitor, an output filter capacitor and an output filter inductor.

INPUT CAPACITOR (C_{IN})

Fast switching of large currents in the buck converter places a heavy demand on the voltage source supplying PVIN. The input capacitor, C_{IN}, supplies extra charge when the switcher needs to draw a burst of current from the supply. The RMS current rating and the voltage rating of the C_{IN} capacitor are therefore important in the selection of C_{IN}. The RMS current specification can be approximated by:

$$I_{RMS} = I_{LOAD}\sqrt{D(1-D)}$$

where D is the duty cycle, V_{OUT}/V_{IN}. C_{IN} also provides filtering of the supply. Trace resistance and inductance degrade the benefits of the input capacitor, so C_{IN} should be placed very close to PVIN in the layout. A 22 µF or 47 µF ceramic capacitor is typically sufficient for C_{IN}. In parallel with the large input capacitance a smaller capacitor should be added such as a 1 µF ceramic for higher frequency filtering. Ceramic capacitors with high quality dielectrics such as X5R or X7R should be used to provide a constant capacitance across temperature and line variations. For improved load regulation and transient performance, the use of a small 1 µF ceramic capacitor is also recommended as a local bypass for the AVIN pin.

SOFT-START CAPACITOR (C_{SS})

The DAC that sets the reference voltage of the error amplifier sources a current through a resistor to set the reference voltage. The reference voltage is one half of the output voltage of the switcher due to the 200 kΩ divider connected to the SNS pin. Upon start-up, the output voltage of the switcher tracks the reference voltage with a two to one ratio as the DAC current charges the capacitance connected to the reference voltage node. Internal capacitance of 20 pF is permanently attached to the reference voltage node which is also connected to the soft start pin, SS. Adding a soft-start capacitor externally increases the time it takes for the output voltage to reach its final level. The charging time required for the reference voltage can be estimated using the RC time constant of the DAC resistor and the capacitance connected to the SS pin. Three RC time constant periods are needed for the reference voltage to reach 95% of its final value. The actual start up time will vary with differences in the DAC resistance and higher-order effects.

If little or no soft-start capacitance is connected, then the start up time may be determined by the time required for the current limit current to charge the output filter capacitance. The capacitor charging equation $I = C\Delta V/\Delta t$ can be used to estimate the start-up time in this case. For example, a part with a 3V output, a 100 µF output capacitance and a 5A current limit threshold would require a time of 60 µs:

Applications Information (Continued)

$$\Delta t = C \frac{\Delta V}{I} = 100\ \mu F \frac{3V}{5A} = 60\ \mu s$$

Since it is undesirable for the power supply to start up in current limit, a soft-start capacitor must be chosen to force the LM2853 to start up in a more controlled fashion based on the charging of the soft-start capacitance. In this example, suppose a 3 ms start time is desired. Three time constants are required for charging the soft-start capacitor to 95% of the final reference voltage. So in this case RC = 1 ms. The DAC resistor, R, is 450 kΩ so C can be calculated to be 2.2 nF. A 2.2 nF ceramic capacitor can be chosen to yield approximately a 3 ms start-up time.

SOFT-START CAPACITOR (C_{SS}) AND FAULT CONDITIONS

Various fault conditions such as short circuit and UVLO of the LM2853 activate internal circuitry designed to control the voltage on the soft-start capacitor. For example, during a short circuit current limit event, the output voltage typically falls to a low voltage. During this time, the soft-start voltage is forced to track the output so that once the short is removed, the LM2853 can restart gracefully from whatever voltage the output reached during the short circuit event. The range of soft-start capacitors is therefore restricted to values 1 nF to 50 nF.

COMPENSATION

The LM2853 provides a highly integrated solution to power supply design. The compensation of the LM2853, which is type-three, is included on-chip. The benefit of integrated compensation is straight-forward, simple power supply design. Since the output filter capacitor and inductor values impact the compensation of the control loop, the range of L_O, C_O and C_{ESR} values is restricted in order to ensure stability.

OUTPUT FILTER VALUES

Table 1 details the recommended inductor and capacitor ranges for the LM2853 that are suggested for various typical output voltages. Values slightly different than those recommended may be used, however the phase margin of the power supply may be degraded. For best performance when output voltage ripple is a concern, ESR values near the minimum of the recommended range should be paired with capacitance values near the maximum. If a minimum output voltage ripple solution from a 5V input voltage is desired, a 6.8 µH inductor can be paired with a 220 µF (50 mΩ) capacitor without degraded phase margin.

TABLE 1. Recommended L_O and C_O Values

		L_O (µH)		C_O (µF)		C_{ESR} (mΩ)	
V_{OUT} (V)	VIN (V)	Min	Max	Min	Max	Min	Max
0.8	5	4.7	6.8	120	220	70	100
0.8	3.3	4.7	4.7	150	220	50	100
1	5	4.7	6.8	120	220	70	100
1	3.3	4.7	4.7	150	220	50	100
1.2	5	4.7	6.8	120	220	70	100
1.2	3.3	4.7	4.7	120	220	60	100
1.5	5	4.7	6.8	120	220	70	100
1.5	3.3	4.7	4.7	120	220	60	100
1.8	5	4.7	6.8	120	220	70	120
1.8	3.3	4.7	4.7	100	220	70	120
2.5	5	4.7	6.8	120	220	70	150
2.5	3.3	4.7	4.7	100	220	80	150
3.0	5	4.7	6.8	120	220	70	150
3.0	3.3	4.7	4.7	100	220	80	150
3.3	5	4.7	6.8	120	220	70	150

Applications Information (Continued)

CHOOSING AN INDUCTANCE VALUE

The current ripple present in the output filter inductor is determined by the input voltage, output voltage, switching frequency and inductance according to the following equation:

$$\Delta I_L = \frac{D \times (V_{IN} - V_{OUT})}{f \times L_O}$$

where ΔI_L is the peak to peak current ripple, D is the duty cycle V_{OUT}/V_{IN}, V_{IN} is the input voltage applied to the output stage, V_{OUT} is the output voltage of the switcher, f is the switching frequency and L_O is the inductance of the output filter inductor. Knowing the current ripple is important for inductor selection since the peak current through the inductor is the load current plus one half the ripple current. Care must be taken to ensure the peak inductor current does not reach a level high enough to trip the current limit circuitry of the LM2853. As an example, consider a 5V to 1.2V conversion and a 550 kHz switching frequency. According to *Table 1*, a 4.7 µH inductor may be used. Calculating the expected peak-to-peak ripple,

$$\Delta I_L = \frac{\frac{1.2V}{5V} \times (5V - 1.2V)}{550\ kHz \times 4.7\ \mu F} = 353\ mA$$

The maximum inductor current for a 3A load would therefore be 3A plus 177 mA, 3.177A. As shown in the ripple equation, the current ripple is inversely proportional to inductance.

OUTPUT FILTER INDUCTORS

Once the inductance value is chosen, the key parameter for selecting the output filter inductor is its saturation current (I_{SAT}) specification. Typically I_{SAT} is given by the manufacturer as the current at which the inductance of the coil falls to a certain percentage of the nominal inductance. The I_{SAT} of an inductor used in an application should be greater than the maximum expected inductor current to avoid saturation. Below is a table of inductors that are suitable in LM2853 applications.

TABLE 2. Recommended Inductors

Inductance	Part Number	Vendor
4.7 µF	DO3308P-472ML	Coilcraft
4.7 µF	DO3316P-472ML	Coilcraft
4.7 µF	MSS1260-472ML	Coilcraft
5.2 µF	MSS1038-522NL	Coilcraft
5.6 µF	MSS1260-562ML	Coilcraft
6.8 µF	DO3316P-682ML	Coilcraft
6.8 µF	MSS1260-682ML	Coilcraft

OUTPUT FILTER CAPACITORS

The recommended capacitors that may be used in the output filter with the LM2853 are limited in value and ESR range according to *Table 1*.

Below are some examples of capacitors that can typically be used in an LM2853 application.

TABLE 3. Recommended Capacitors

Capacitance (µF)	Part Number	Chemistry	Vendor
100	594D107X_010C2T	Tantalum	Vishay-Sprague
100	593D107X_010D2_E3	Tantalum	Vishay-Sprague
100	TPSC107M006#0075	Tantalum	AVX
100	NOSD107M006#0080	Niobium Oxide	AVX
100	NOSC107M004#0070	Niobium Oxide	AVX
120	594D127X_6R3C2T	Tantalum	Vishay-Sprague
150	594D157X_010C2T	Tantalum	Vishay-Sprague
150	595D157X_010D2T	Tantalum	Vishay-Sprague
150	591D157X_6R3C2_20H	Tantalum	Vishay-Sprague
150	TPSD157M006#0050	Tantalum	AVX
150	TPSC157M004#0070	Tantalum	AVX
150	NOSD157M006#0070	Niobium Oxide	AVX
220	594D227X_6R3D2T	Tantalum	Vishay-Sprague
220	591D227X_6R3D2_20H	Tantalum	Vishay-Sprague
220	591D227X_010D2_20H	Tantalum	Vishay-Sprague
220	593D227X_6R3D2_E3	Tantalum	Vishay-Sprague

Applications Information (Continued)

TABLE 3. Recommended Capacitors (Continued)

Capacitance (μF)	Part Number	Chemistry	Vendor
220	TPSD227M006#0050	Tantalum	AVX
220	NOSD227M0040060	Niobium Oxide	AVX

SPLIT-RAIL OPERATION

The LM2853 can be powered using two separate voltages for AVIN and PVIN. AVIN is the supply for the control logic; PVIN is the supply for the power FETs. The output filter components need to be chosen based on the value of PVIN. For PVIN levels lower than 3.3V, use output filter component values recommended for 3.3V. PVIN must always be equal to or less than AVIN.

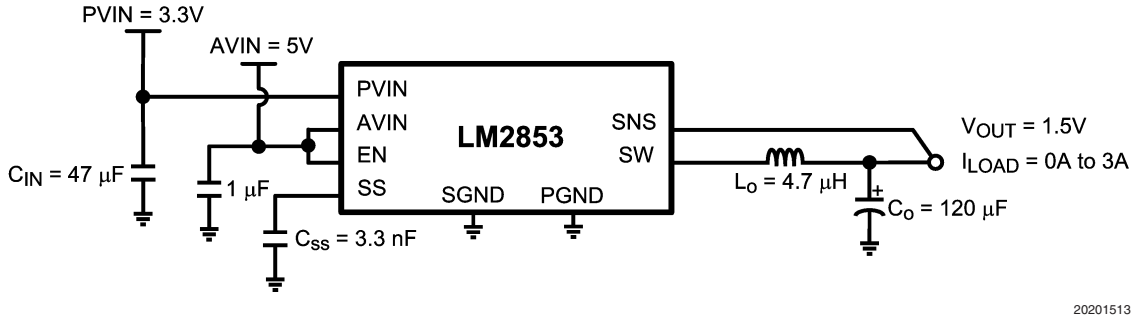

SWITCH NODE PROTECTION

The LM2853 includes protection circuitry that monitors the voltage on the switch pin. Under certain fault conditions, switching is disabled in order to protect the switching devices. One side effect of the protection circuitry may be observed when power to the LM2853 is applied with no or light load on the output. The output will regulate to the rated voltage, but no switching may be observed. As soon as the output is loaded, the LM2853 will begin normal switching operation.

LAYOUT GUIDELINES

These are several guidelines to follow while designing the PCB layout for an LM2853 application.

1. The input bulk capacitor, C_{IN}, should be placed very close to the PVIN pin to keep the resistance as low as possible between the capacitor and the pin. High current levels will be present in this connection.
2. All ground connections must be tied together. Use a broad ground plane, for example a completely filled back plane, to establish the lowest resistance possible between all ground connections.
3. The sense pin connection should be made as close to the load as possible so that the voltage at the load is the expected regulated value. The sense line should not run too close to nodes with high dV/dt or dI/dt (such as the switch node) to minimize interference.
4. The switch node connections should be low resistance to reduce power losses. Low resistance means the trace between the switch pin and the inductor should be wide. However, the area of the switch node should not be too large since EMI increases with greater area. So connect the inductor to the switch pin with a short, but wide trace. Other high current connections in the application such as PVIN and V_{OUT} assume the same trade off between low resistance and EMI.
5. Allow area under the chip to solder the entire exposed die attach pad to ground for improved thermal performance. Lab measurements also show improved regulation performance when the exposed pad is well grounded.

LM2853 Example Circuit Schematic

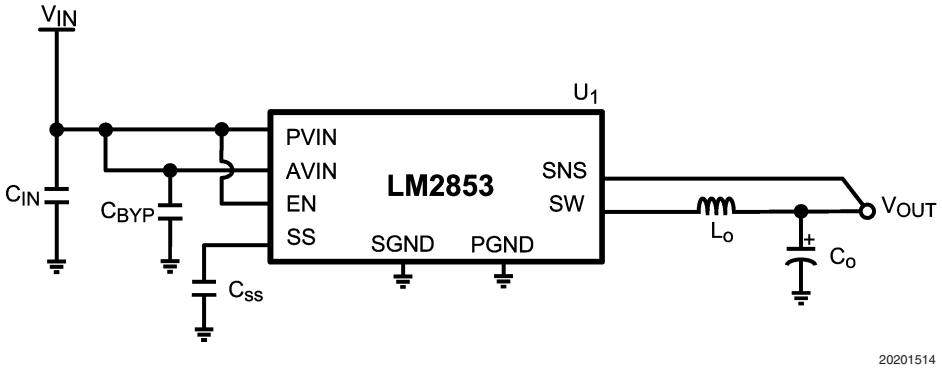

FIGURE 1.

LM2853 Example Circuit Schematic (Continued)

Bill of Materials for 5V to 3.3V Conversion

ID	Part Number	Type	Size	Parameters	Qty	Vendor
U_1	LM2853MH-3.3	3A Buck	ETSSOP-14	3.3V	1	NSC
C_{IN}	GRM31CR60J476ME19	Capacitor	1206	47 µF	1	Murata
C_{BYP}	GRM21BR71C105KA01	Capacitor	0805	1 µF	1	Murata
C_{SS}	VJ0805Y222KXXA	Capacitor	0603	2.2 nF	1	Vishay-Vitramon
L_O	DO3316P-682	Inductor	DO3316P	6.8 µH	1	Coilcraft
C_O	594D127X06R3C2T	Capacitor	C Case	120µF (85mΩ)	1	Vishay-Sprague

Bill of Materials for 3.3V to 1.2V Conversion

ID	Part Number	Type	Size	Parameters	Qty	Vendor
U_1	LM2853MH-1.2	3A Buck	ETSSOP-14	1.2V	1	NSC
C_{IN}	GRM31CR60J476ME19	Capacitor	1206	47 µF	1	Murata
C_{BYP}	GRM21BR71C105KA01	Capacitor	0805	1 µF	1	Murata
CSS	VJ0805Y222KXXA	Capacitor	0603	2.2 nF	1	Vishay-Vitramon
L_O	DO3316P-472	Inductor	DO3316P	4.7 µH	1	Coilcraft
C_O	NOSD157M006R0070	Capacitor	D Case	150 µF (70 mΩ)	1	AVX

PACKAGING INFORMATION

Orderable Device	Status (1)	Package Type	Package Drawing	Pins	Package Qty	Eco Plan (2)	Lead/Ball Finish (6)	MSL Peak Temp (3)	Op Temp (°C)	Device Marking (4/5)	Samples
LM2853MH-1.0/NOPB	ACTIVE	HTSSOP	PWP	14	94	Green (RoHS & no Sb/Br)	CU SN	Level-1-260C-UNLIM	-40 to 125	LM2853 -1.0	Samples
LM2853MH-1.2/NOPB	ACTIVE	HTSSOP	PWP	14	94	Green (RoHS & no Sb/Br)	CU SN	Level-1-260C-UNLIM	-40 to 125	LM2853 -1.2	Samples
LM2853MH-1.5/NOPB	ACTIVE	HTSSOP	PWP	14	94	Green (RoHS & no Sb/Br)	CU SN	Level-1-260C-UNLIM	-40 to 125	LM2853 -1.5	Samples
LM2853MH-1.8/NOPB	ACTIVE	HTSSOP	PWP	14	94	Green (RoHS & no Sb/Br)	CU SN	Level-1-260C-UNLIM	-40 to 125	LM2853 -1.8	Samples
LM2853MH-2.5/NOPB	ACTIVE	HTSSOP	PWP	14	94	Green (RoHS & no Sb/Br)	CU SN	Level-1-260C-UNLIM	-40 to 125	LM2853 -2.5	Samples
LM2853MH-3.0/NOPB	ACTIVE	HTSSOP	PWP	14	94	Green (RoHS & no Sb/Br)	CU SN	Level-1-260C-UNLIM	-40 to 125	LM2853 -3.0	Samples
LM2853MH-3.3	NRND	HTSSOP	PWP	14		TBD	Call TI	Call TI	-40 to 125	LM2853 -3.3	
LM2853MH-3.3/NOPB	ACTIVE	HTSSOP	PWP	14	94	Green (RoHS & no Sb/Br)	CU SN	Level-1-260C-UNLIM	-40 to 125	LM2853 -3.3	Samples
LM2853MHX-1.0/NOPB	ACTIVE	HTSSOP	PWP	14	2500	Green (RoHS & no Sb/Br)	CU SN	Level-1-260C-UNLIM	-40 to 125	LM2853 -1.0	Samples
LM2853MHX-1.2/NOPB	ACTIVE	HTSSOP	PWP	14	2500	Green (RoHS & no Sb/Br)	CU SN	Level-1-260C-UNLIM	-40 to 125	LM2853 -1.2	Samples
LM2853MHX-1.5/NOPB	ACTIVE	HTSSOP	PWP	14	2500	Green (RoHS & no Sb/Br)	CU SN	Level-1-260C-UNLIM	-40 to 125	LM2853 -1.5	Samples
LM2853MHX-1.8/NOPB	ACTIVE	HTSSOP	PWP	14	2500	Green (RoHS & no Sb/Br)	CU SN	Level-1-260C-UNLIM	-40 to 125	LM2853 -1.8	Samples
LM2853MHX-2.5/NOPB	ACTIVE	HTSSOP	PWP	14	2500	Green (RoHS & no Sb/Br)	CU SN	Level-1-260C-UNLIM	-40 to 125	LM2853 -2.5	Samples
LM2853MHX-3.3/NOPB	ACTIVE	HTSSOP	PWP	14	2500	Green (RoHS & no Sb/Br)	CU SN	Level-1-260C-UNLIM	-40 to 125	LM2853 -3.3	Samples

(1) The marketing status values are defined as follows:
ACTIVE: Product device recommended for new designs.
LIFEBUY: TI has announced that the device will be discontinued, and a lifetime-buy period is in effect.
NRND: Not recommended for new designs. Device is in production to support existing customers, but TI does not recommend using this part in a new design.
PREVIEW: Device has been announced but is not in production. Samples may or may not be available.
OBSOLETE: TI has discontinued the production of the device.

(2) Eco Plan - The planned eco-friendly classification: Pb-Free (RoHS), Pb-Free (RoHS Exempt), or Green (RoHS & no Sb/Br) - please check http://www.ti.com/productcontent for the latest availability information and additional product content details.
TBD: The Pb-Free/Green conversion plan has not been defined.
Pb-Free (RoHS): TI's terms "Lead-Free" or "Pb-Free" mean semiconductor products that are compatible with the current RoHS requirements for all 6 substances, including the requirement that lead not exceed 0.1% by weight in homogeneous materials. Where designed to be soldered at high temperatures, TI Pb-Free products are suitable for use in specified lead-free processes.
Pb-Free (RoHS Exempt): This component has a RoHS exemption for either 1) lead-based flip-chip solder bumps used between the die and package, or 2) lead-based die adhesive used between the die and leadframe. The component is otherwise considered Pb-Free (RoHS compatible) as defined above.
Green (RoHS & no Sb/Br): TI defines "Green" to mean Pb-Free (RoHS compatible), and free of Bromine (Br) and Antimony (Sb) based flame retardants (Br or Sb do not exceed 0.1% by weight in homogeneous material)

(3) MSL, Peak Temp. - The Moisture Sensitivity Level rating according to the JEDEC industry standard classifications, and peak solder temperature.

(4) There may be additional marking, which relates to the logo, the lot trace code information, or the environmental category on the device.

(5) Multiple Device Markings will be inside parentheses. Only one Device Marking contained in parentheses and separated by a "~" will appear on a device. If a line is indented then it is a continuation of the previous line and the two combined represent the entire Device Marking for that device.

(6) Lead/Ball Finish - Orderable Devices may have multiple material finish options. Finish options are separated by a vertical ruled line. Lead/Ball Finish values may wrap to two lines if the finish value exceeds the maximum column width.

Important Information and Disclaimer: The information provided on this page represents TI's knowledge and belief as of the date that it is provided. TI bases its knowledge and belief on information provided by third parties, and makes no representation or warranty as to the accuracy of such information. Efforts are underway to better integrate information from third parties. TI has taken and continues to take reasonable steps to provide representative and accurate information but may not have conducted destructive testing or chemical analysis on incoming materials and chemicals. TI and TI suppliers consider certain information to be proprietary, and thus CAS numbers and other limited information may not be available for release.

In no event shall TI's liability arising out of such information exceed the total purchase price of the TI part(s) at issue in this document sold by TI to Customer on an annual basis.

TAPE AND REEL INFORMATION

REEL DIMENSIONS

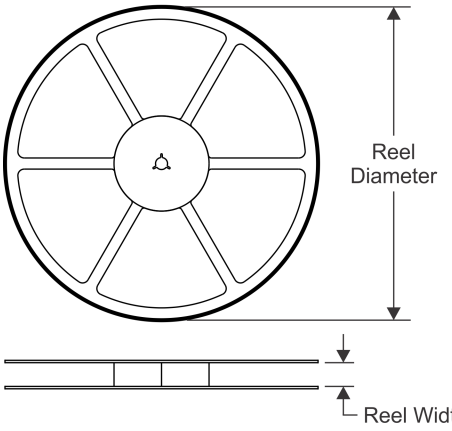

TAPE DIMENSIONS

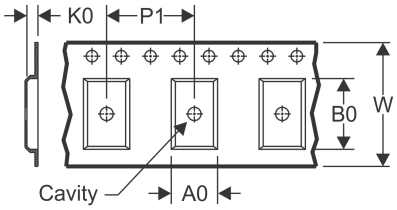

A0	Dimension designed to accommodate the component width
B0	Dimension designed to accommodate the component length
K0	Dimension designed to accommodate the component thickness
W	Overall width of the carrier tape
P1	Pitch between successive cavity centers

QUADRANT ASSIGNMENTS FOR PIN 1 ORIENTATION IN TAPE

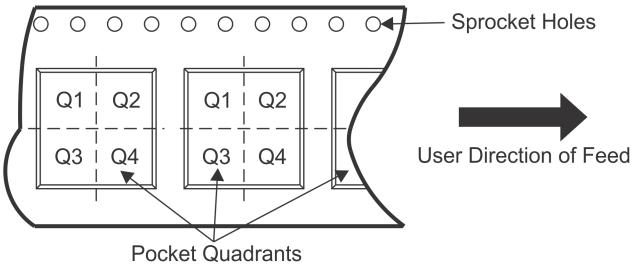

*All dimensions are nominal

Device	Package Type	Package Drawing	Pins	SPQ	Reel Diameter (mm)	Reel Width W1 (mm)	A0 (mm)	B0 (mm)	K0 (mm)	P1 (mm)	W (mm)	Pin1 Quadrant
LM2853MHX-1.0/NOPB	HTSSOP	PWP	14	2500	330.0	12.4	6.95	5.6	1.6	8.0	12.0	Q1
LM2853MHX-1.2/NOPB	HTSSOP	PWP	14	2500	330.0	12.4	6.95	5.6	1.6	8.0	12.0	Q1
LM2853MHX-1.5/NOPB	HTSSOP	PWP	14	2500	330.0	12.4	6.95	5.6	1.6	8.0	12.0	Q1
LM2853MHX-1.8/NOPB	HTSSOP	PWP	14	2500	330.0	12.4	6.95	5.6	1.6	8.0	12.0	Q1
LM2853MHX-2.5/NOPB	HTSSOP	PWP	14	2500	330.0	12.4	6.95	5.6	1.6	8.0	12.0	Q1
LM2853MHX-3.3/NOPB	HTSSOP	PWP	14	2500	330.0	12.4	6.95	5.6	1.6	8.0	12.0	Q1

TAPE AND REEL BOX DIMENSIONS

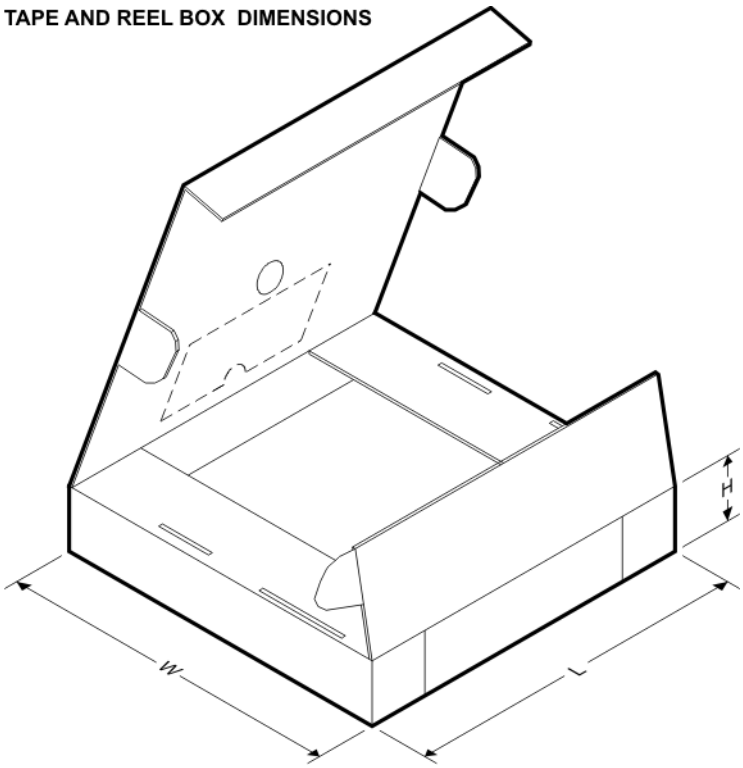

*All dimensions are nominal

Device	Package Type	Package Drawing	Pins	SPQ	Length (mm)	Width (mm)	Height (mm)
LM2853MHX-1.0/NOPB	HTSSOP	PWP	14	2500	367.0	367.0	35.0
LM2853MHX-1.2/NOPB	HTSSOP	PWP	14	2500	367.0	367.0	35.0
LM2853MHX-1.5/NOPB	HTSSOP	PWP	14	2500	367.0	367.0	35.0
LM2853MHX-1.8/NOPB	HTSSOP	PWP	14	2500	367.0	367.0	35.0
LM2853MHX-2.5/NOPB	HTSSOP	PWP	14	2500	367.0	367.0	35.0
LM2853MHX-3.3/NOPB	HTSSOP	PWP	14	2500	367.0	367.0	35.0

PWP0014A

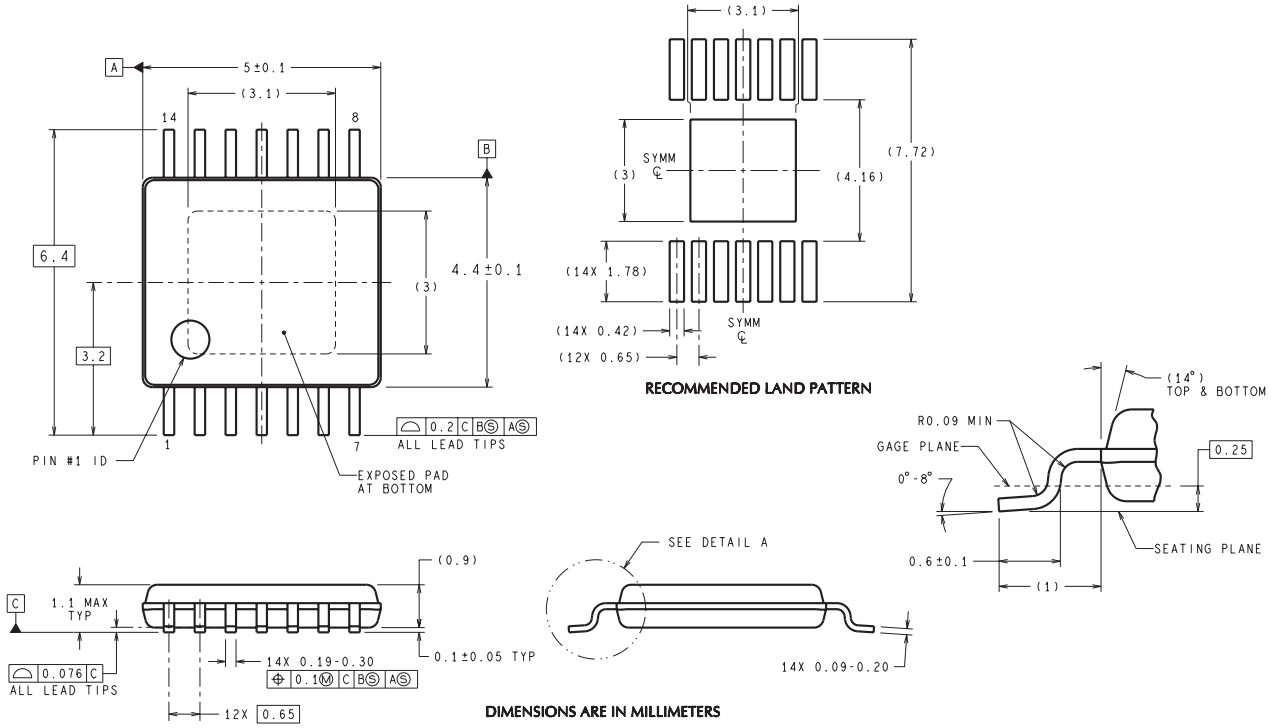
A
5±0.1
(3.1)
14
8
B
6.4
4.4±0.1
(3)
3.2
1
7
PIN #1 ID
0.2 C B S A S
ALL LEAD TIPS
EXPOSED PAD
AT BOTTOM
(3.1)
(7.72)
SYMM
(3)
(4.16)
(14X 1.78)
(14X 0.42)
(12X 0.65)
SYMM
RECOMMENDED LAND PATTERN
(14°)
TOP & BOTTOM
R0.09 MIN
GAGE PLANE
0.25
0°-8°
SEATING PLANE
0.6±0.1
(1)
(0.9)
C
1.1 MAX
TYP
0.076 C
ALL LEAD TIPS
14X 0.19-0.30
0.1 M C B S A S
0.1±0.05 TYP
12X 0.65
SEE DETAIL A
14X 0.09-0.20
DIMENSIONS ARE IN MILLIMETERS
MXA14A (Rev A)

IMPORTANT NOTICE

Texas Instruments Incorporated and its subsidiaries (TI) reserve the right to make corrections, enhancements, improvements and other changes to its semiconductor products and services per JESD46, latest issue, and to discontinue any product or service per JESD48, latest issue. Buyers should obtain the latest relevant information before placing orders and should verify that such information is current and complete. All semiconductor products (also referred to herein as “components”) are sold subject to TI’s terms and conditions of sale supplied at the time of order acknowledgment.

TI warrants performance of its components to the specifications applicable at the time of sale, in accordance with the warranty in TI’s terms and conditions of sale of semiconductor products. Testing and other quality control techniques are used to the extent TI deems necessary to support this warranty. Except where mandated by applicable law, testing of all parameters of each component is not necessarily performed.

TI assumes no liability for applications assistance or the design of Buyers’ products. Buyers are responsible for their products and applications using TI components. To minimize the risks associated with Buyers’ products and applications, Buyers should provide adequate design and operating safeguards.

TI does not warrant or represent that any license, either express or implied, is granted under any patent right, copyright, mask work right, or other intellectual property right relating to any combination, machine, or process in which TI components or services are used. Information published by TI regarding third-party products or services does not constitute a license to use such products or services or a warranty or endorsement thereof. Use of such information may require a license from a third party under the patents or other intellectual property of the third party, or a license from TI under the patents or other intellectual property of TI.

Reproduction of significant portions of TI information in TI data books or data sheets is permissible only if reproduction is without alteration and is accompanied by all associated warranties, conditions, limitations, and notices. TI is not responsible or liable for such altered documentation. Information of third parties may be subject to additional restrictions.

Resale of TI components or services with statements different from or beyond the parameters stated by TI for that component or service voids all express and any implied warranties for the associated TI component or service and is an unfair and deceptive business practice. TI is not responsible or liable for any such statements.

Buyer acknowledges and agrees that it is solely responsible for compliance with all legal, regulatory and safety-related requirements concerning its products, and any use of TI components in its applications, notwithstanding any applications-related information or support that may be provided by TI. Buyer represents and agrees that it has all the necessary expertise to create and implement safeguards which anticipate dangerous consequences of failures, monitor failures and their consequences, lessen the likelihood of failures that might cause harm and take appropriate remedial actions. Buyer will fully indemnify TI and its representatives against any damages arising out of the use of any TI components in safety-critical applications.

In some cases, TI components may be promoted specifically to facilitate safety-related applications. With such components, TI’s goal is to help enable customers to design and create their own end-product solutions that meet applicable functional safety standards and requirements. Nonetheless, such components are subject to these terms.

No TI components are authorized for use in FDA Class III (or similar life-critical medical equipment) unless authorized officers of the parties have executed a special agreement specifically governing such use.

Only those TI components which TI has specifically designated as military grade or “enhanced plastic” are designed and intended for use in military/aerospace applications or environments. Buyer acknowledges and agrees that any military or aerospace use of TI components which have ***not*** been so designated is solely at the Buyer's risk, and that Buyer is solely responsible for compliance with all legal and regulatory requirements in connection with such use.

TI has specifically designated certain components as meeting ISO/TS16949 requirements, mainly for automotive use. In any case of use of non-designated products, TI will not be responsible for any failure to meet ISO/TS16949.

Products		**Applications**	
Audio	www.ti.com/audio	Automotive and Transportation	www.ti.com/automotive
Amplifiers	amplifier.ti.com	Communications and Telecom	www.ti.com/communications
Data Converters	dataconverter.ti.com	Computers and Peripherals	www.ti.com/computers
DLP® Products	www.dlp.com	Consumer Electronics	www.ti.com/consumer-apps
DSP	dsp.ti.com	Energy and Lighting	www.ti.com/energy
Clocks and Timers	www.ti.com/clocks	Industrial	www.ti.com/industrial
Interface	interface.ti.com	Medical	www.ti.com/medical
Logic	logic.ti.com	Security	www.ti.com/security
Power Mgmt	power.ti.com	Space, Avionics and Defense	www.ti.com/space-avionics-defense
Microcontrollers	microcontroller.ti.com	Video and Imaging	www.ti.com/video
RFID	www.ti-rfid.com		
OMAP Applications Processors	www.ti.com/omap	**TI E2E Community**	e2e.ti.com
Wireless Connectivity	www.ti.com/wirelessconnectivity		

Mailing Address: Texas Instruments, Post Office Box 655303, Dallas, Texas 75265
Copyright © 2016, Texas Instruments Incorporated